Aluminium Architectural Systems



REWW141

Window Wall System

Technical Properties

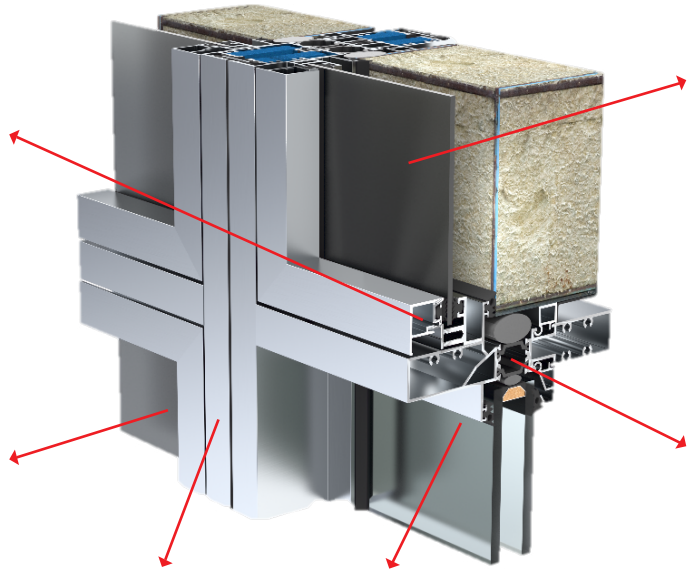

PERFORMANCE TYPE	CLASSIFICATION STANDARD	PERFORMANCE CLASS	PERFORMANCE VALUES
Air Impermeability	**EN 12152 – Class A4 Windows and Doors Product standard**	**CLASS A4**	**±600 PA**
Watertightnees	**EN12154 – Class R7 Windows and Doors Product standard**	**CLASS R7**	**600 PA**
Resistance to Wind Load	**EN13830**	**PASS**	**+/- 2600PA**
Extreme Load	**EN13830**	**PASS**	**+/- 3900PA**
Thermal Insulation / Uw	**EN10077-2**	**-**	**1,4 W/m2K**

Section Detail

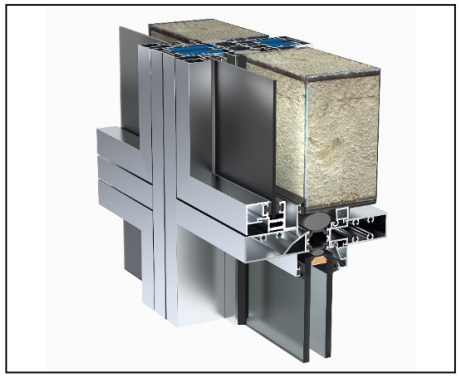
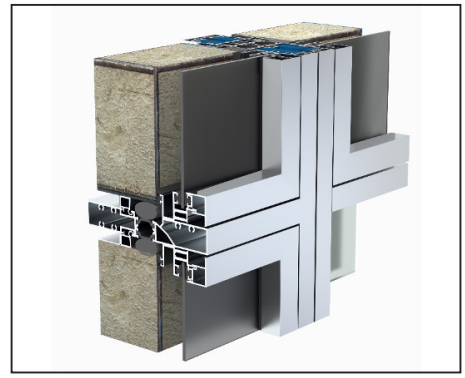
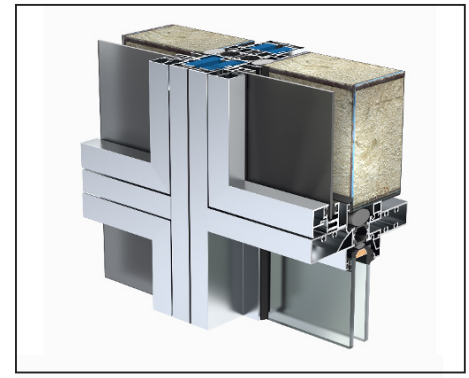
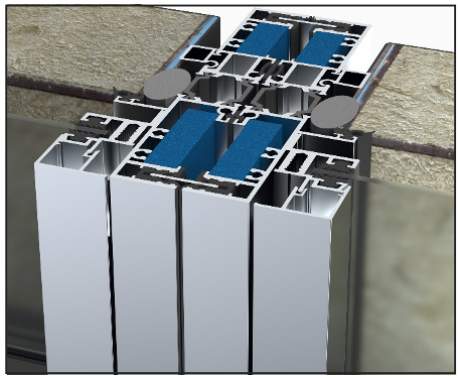
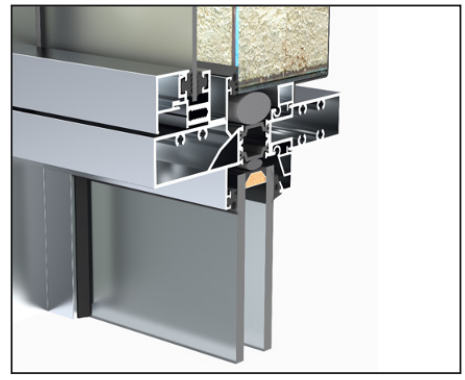
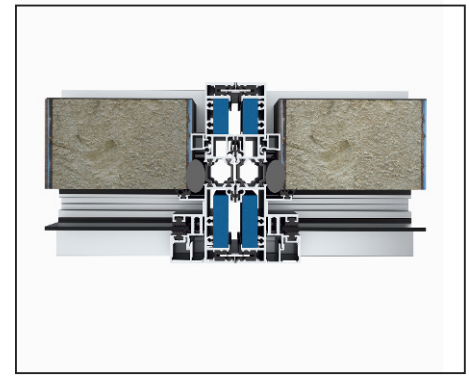
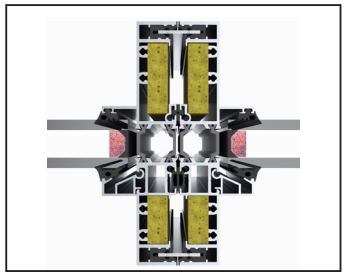
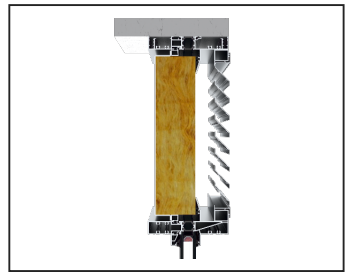
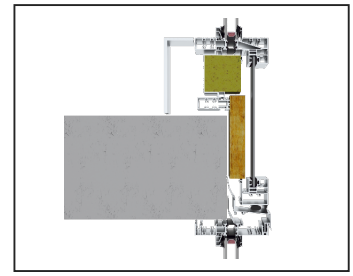
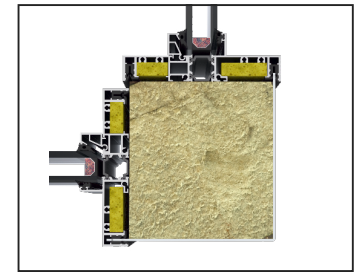



It has an enhanced special design and assembly solution details according to standard facade systems. In this way, it provides the advantage of easier assembly and economical installation from inside the building without scaffolding.

REWW141

The current door, window and sliding systems of ALMORE can be easily and seamlessly integrated into the system.



REWW141

https://almorewindows.com



REWW141 Window Wall System is one of the new generation products developed for the needs of different projects around the world.

https://almorewindows.com



Each section in modules can independently be produced in the workshop. Thanks to its spectacular design, the system provides advanced air and water sealing between modules of the system.



It provides assembly flexibility during construction with its internal and external optional glazing system.
It is designed in accordance with European CE and American ASTM standards.