ALMORE WINDOWS

ARCHITECTURAL CATALOGUE

Aluminium Door and Window Systems

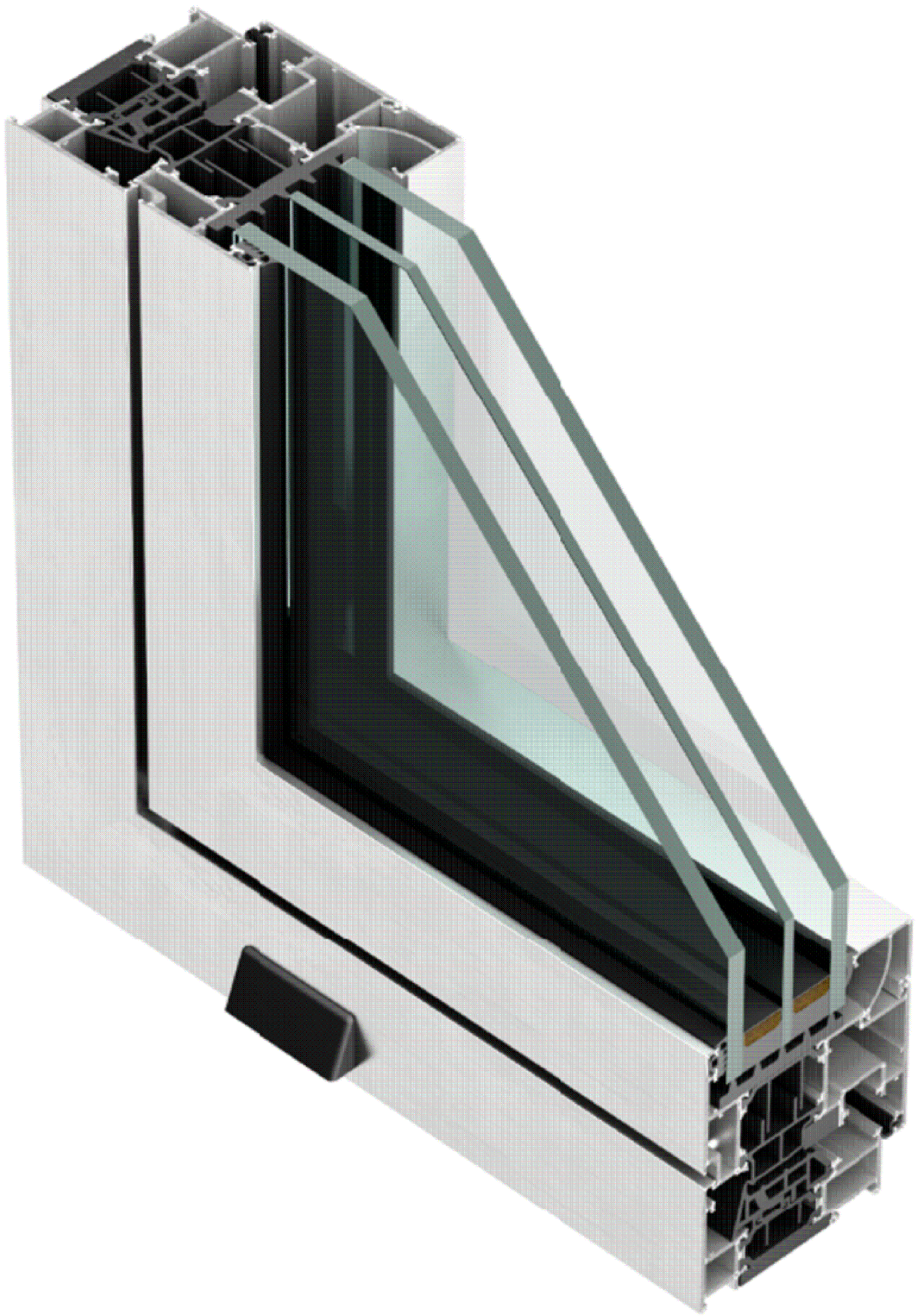

RWLT75F

RWT75F

ALMORE WINDOWS

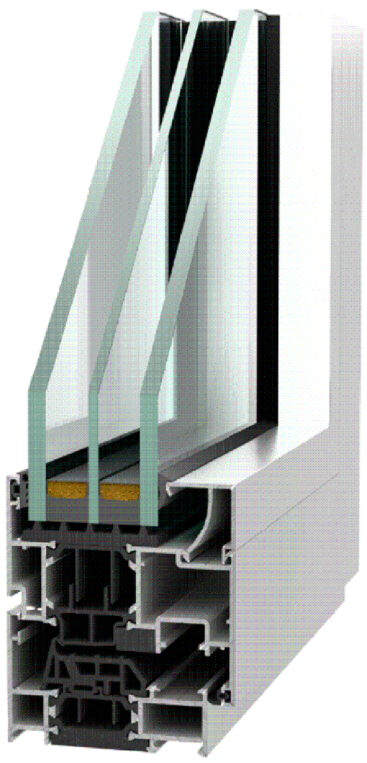

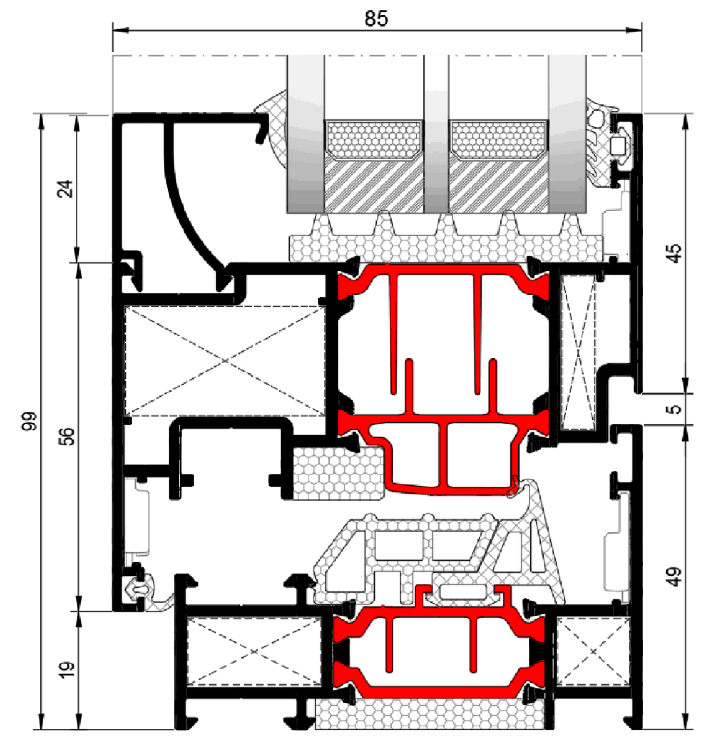

TECHNICAL PROPERTIES

FRAME DEPTH	75mm
VENT DEPTH	85mm
PROFILE GLASS THIKNESS	1,8mm
MAX. GLASS THICKNESS	48mm / 58mm
THERMAL INSULATION BAR	34mm

APPLICATION ALTERNATIVES	DOOR	WINDOW
INWARD OPENING	•	•
BOTTOM HUNG	•	•
TILT&TURN OPENING	•	•
VENT FOR PVC ACCESSORIES	•	•

www.almorewindows.com

PERFORMANCE VALUES

 920 x 1520 **PRODUCT TYPE** **920mm x 1520mm**	PERFORMANCE VALUES									
EN 12207 (*AIR PERMEABILITY*)	**1** (150 Pa)		**2** (300 Pa)		**3** (450 Pa)		**4** (600 Pa)			
EN 12208 (*WATERTIGHTNESS*)	**2A** (50 Pa)	**3A** (100 Pa)	**4A** (150 Pa)	**5A** (200 Pa)	**6A** (250 Pa)	**7A** (300 Pa)	**8A** (450 Pa)	**9A** (600 Pa)	**E...** (600+ Pa)	**E1350** (1350 Pa)
EN 12210 (*RESISTANCE TO WIND LOAD*)	**1** (400 Pa)	**2** (800 Pa)	**3** (1200 Pa)	**4** (1600 Pa)	**5** (2000 Pa)	**E...** (2000+ Pa)				
EN 12210 (*DEFLECTION CRITEIA*)	**A** (L/150)		**B** (L/200)		**C** (L/300)					
TS EN 13115 (*STATIC TORSION*)	**4** (350 N)									
EN 10077-2 (*THERMAL INSULATION VALUE*)										1,64~1,83 W/m²K

 1264 x 2464 **PRODUCT TYPE** **1264mm x 2464mm**	PERFORMANCE VALUES									
EN 12207 (*AIR PERMEABILITY*)	**1** (150 Pa)		**2** (300 Pa)		**3** (450 Pa)		**4** (600 Pa)			
EN 12208 (*WATERTIGHTNESS*)	**2A** (50 Pa)	**3A** (100 Pa)	**4A** (150 Pa)	**5A** (200 Pa)	**6A** (250 Pa)	**7A** (300 Pa)	**8A** (450 Pa)	**9A** (600 Pa)	**E...** (600+ Pa)	
EN 12210 (*RESISTANCE TO WIND LOAD*)	**1** (400 Pa)	**2** (800 Pa)	**3** (1200 Pa)	**4** (1600 Pa)	**5** (2000 Pa)	**E...** (2000+ Pa)				
EN 12210 (*DEFLECTION CRITEIA*)	**A** (L/150)		**B** (L/200)		**C** (L/300)					
TS EN 13115 (*STATIC TORSION*)	**4** (350 N)									
EN 10077-2 (*THERMAL INSULATION VALUE*)										1,64~1,83 W/m²K

www.almorewindows.com

THERMAL INSULATION VALUE (UF):

GLASS THİCKNESS: min. 29mm - max. 58mm

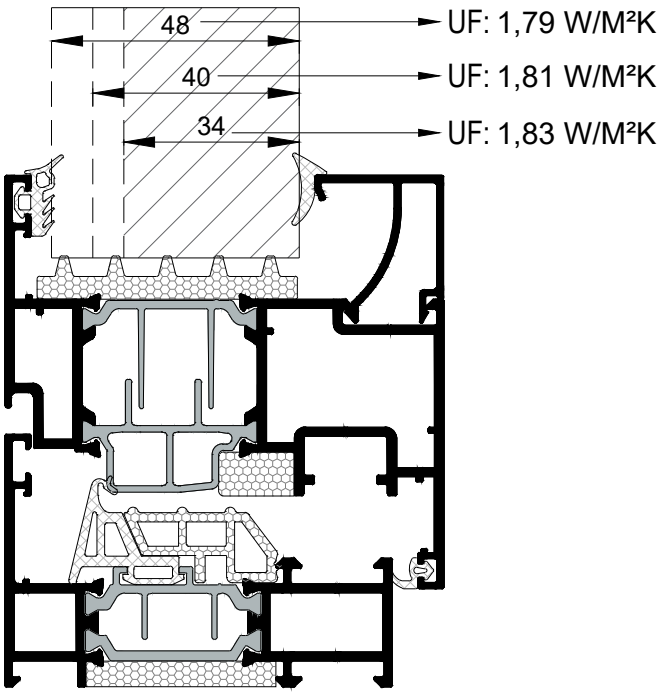

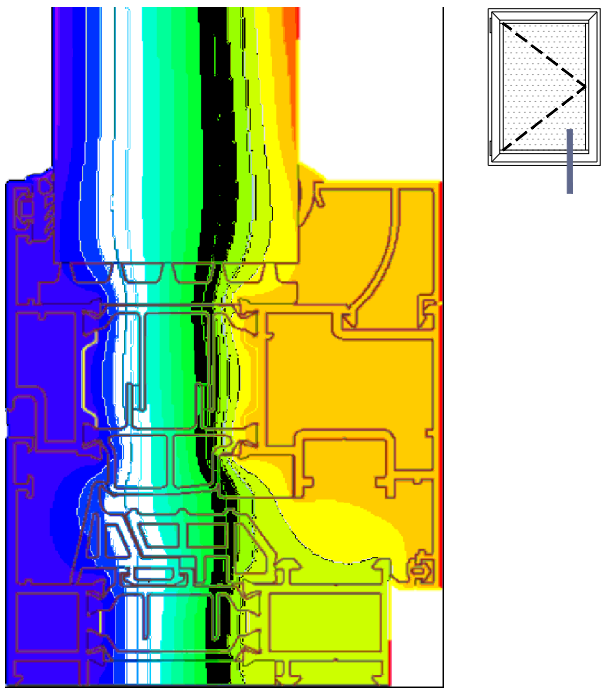

GLASS THİCKNESS: min. 23mm - max. 48mm

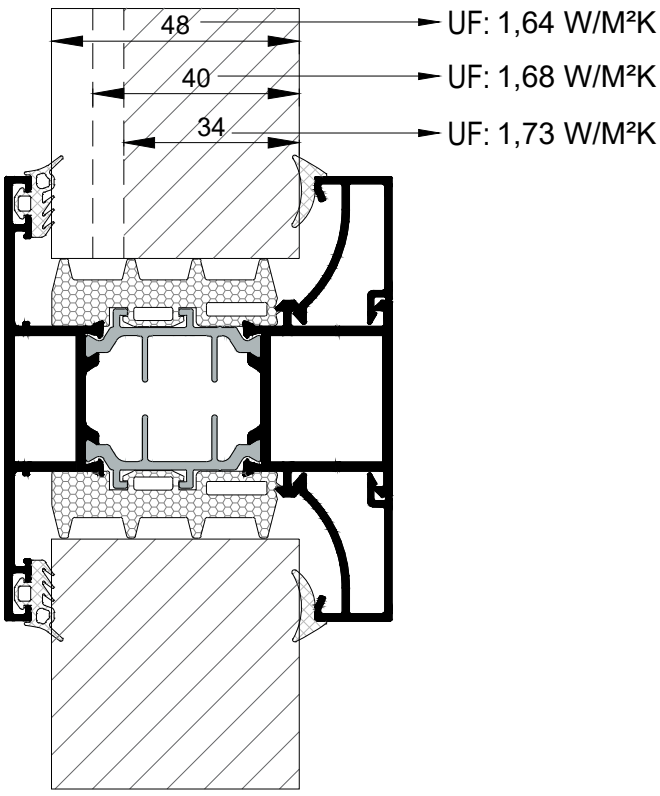

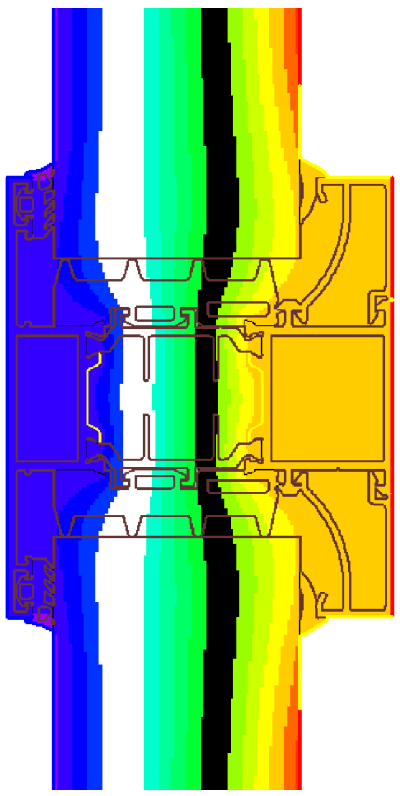

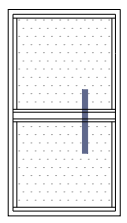

GLASS THİCKNESS : min. 23mm - max. 48mm

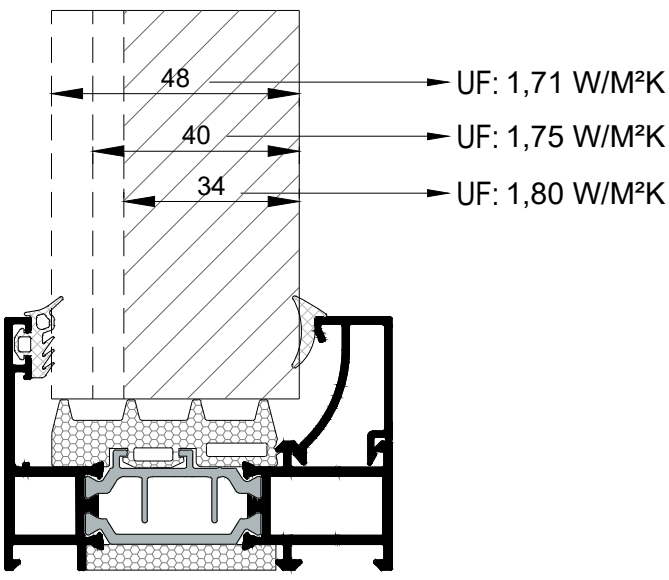

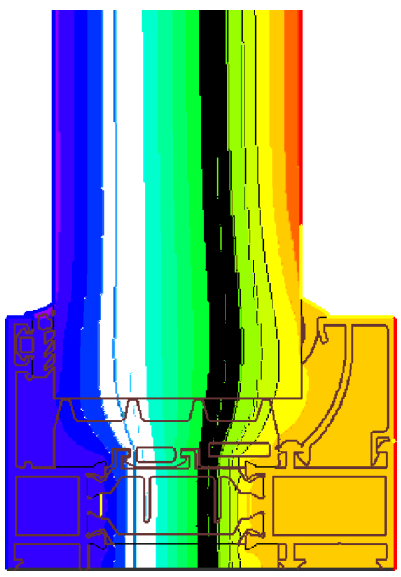

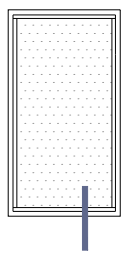

www.almorewindows.com

THEORYTICAL HEAT CONDUCTION (UW):

SCHEME	DETAILS	UW (W/m²K)		
		Ug : 0,5 W/m²K	Ug : 0,7 W/m²K	Ug : 1,0 W/m²K
A 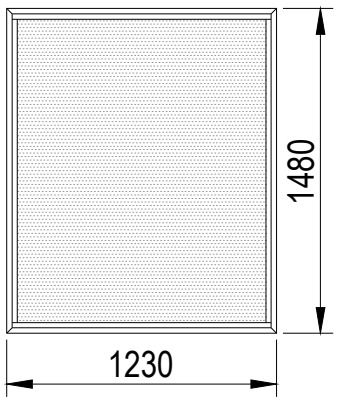	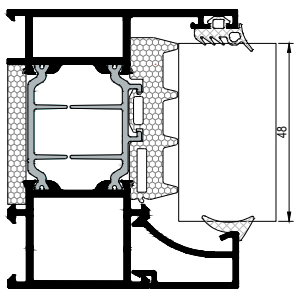	0,74	0,91	1,16
B 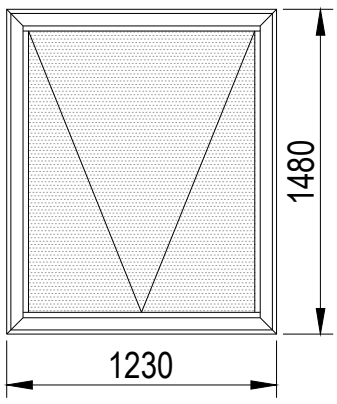	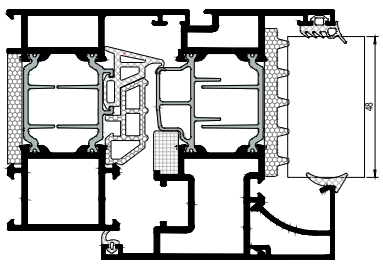	0,897	1,036	1,245

*Uw calculations for the window and door modules of the RWT75F system were made in accordance with EN-ISO 10077-2 principles.