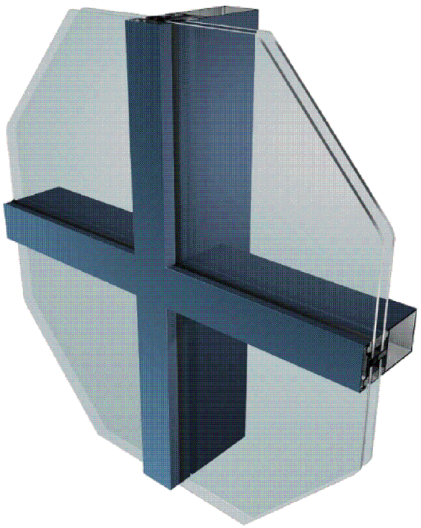

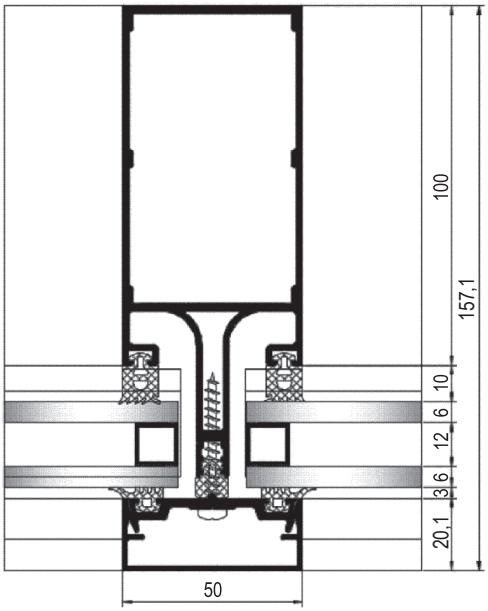

TECHNICAL SPECIFICATIONS

PROFILE WIDTH	50 mm
MULLION DEPTH	min. 80mm - max. 200mm
TRANSOM DEPTH	min. 30mm - max. 146mm
PROFILE WALL THICKNESS	1,6/ 1,8/ 2/ 2,2/ 2,5/ 3 mm
MAXIMUM GLASS THICKNESS	36mm
THERMAL BREAK BARS	14,8mm

APPLICATION OPTIONS

CAPPED CURTAIN WALL	•
STRUCTURAL SILICONE GLAZING	•
SEMI-CAPPED CURTAIN WALL	•
CONCEALED OUTWARD-OPENING SASH	•

AIR PERMEABILITY EN 12152	**1** (150 Pa)	**2** (300 Pa)	**3** (450 Pa)	**4** (600 Pa)	
WATERTIGHTNESS EN 12154	**R4** (150 Pa)	**R5** (300 Pa)	**R6** (450 Pa)	**R7** (600 Pa)	**RE...** (600+ Pa)
RESISTANCE TO WIND LOAD EN 13830	**± 1200 Pa**				
CAPPED SYSTEM - Uf VALUE EN 10077-2	2,76-4,54 W/M²K				
CASSETTE SYSTEM - Uf VALUE EN 10077-2	3,19 W/M²K				

THERMAL TRANSMITTANCE VALUES (Uf)

CAPPED CURTAIN WALL

Glass thickness: min. 18 mm - max. 40 mm

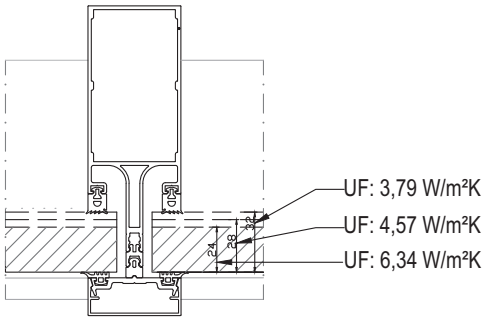

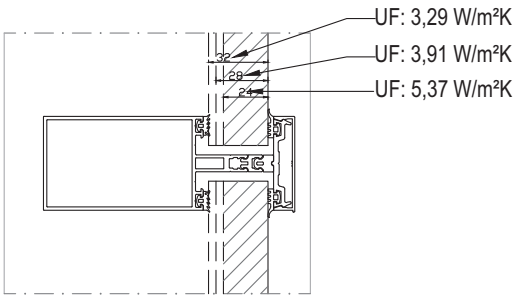

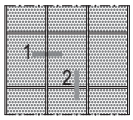

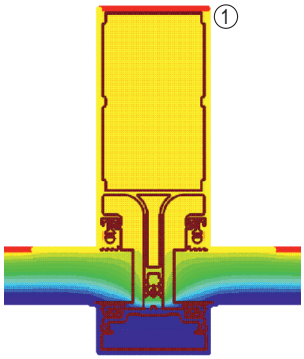

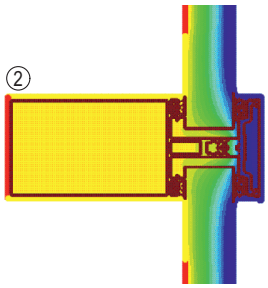

STRUCTURAL SILICONE GLAZED CURTAIN WALL

Glass thickness: min. 18 mm - max. 40 mm

