ARCHITECTURAL CATALOGUE

Aluminium Window, Door and Facade Systems

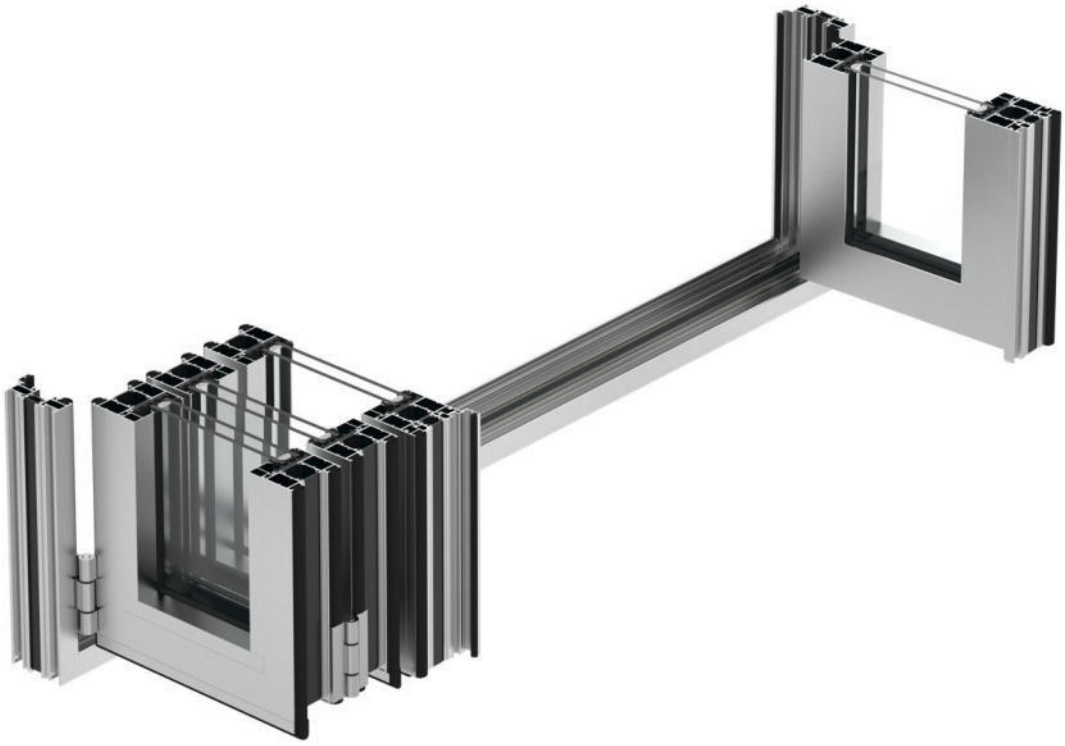

REFD77

TECHNICAL PROPERTIES

REFD77



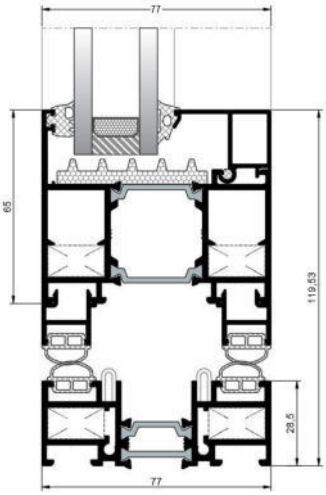

TECHNICAL PROPERTIES

FRAME DEPTH	77mm
SASH DEPTH	65mm
PROFILE WALL THICKNESS	1,8mm
MAX. GLASS THICKNESS	24 / 28 / 32 / 36 / 50mm
THERMAL BREAK WIDTH	24 / 31mm

APPLICATION OPTIONS	**DOOR**	**WINDOW**
FOLDING	*	*

AIR PERMEABILITY - EN 12207	**1** (150 Pa)	**2** (300 Pa)	**3** (450 Pa)	**4** (600 Pa)					
WATERTIGHTNESS - EN 12208	**2A** (50 Pa)	**3A** (100 Pa)	**4A** (150 Pa)	**5A** (200 Pa)	**6A** (250 Pa)	**7A** (300 Pa)	**8A** (450 Pa)	**9A** (600 Pa)	**E750** (600+ Pa)
WIND LOAD RESISTANCE - EN 12210	**1** (400 Pa)	**2** (800 Pa)	**3** (1200 Pa)	**4** (1600 Pa)	**5** (2000 Pa)	**E...** (2000+ Pa)			
DEFLECTION CLASS - EN 12210	**A** (L/150)	**B** (L/200)	**C** (L/300)						
FRAME Uf VALUE - EN 10077-2									2,16 - 2,90 W/M²K

1. ALUMINIUM ALLOY	**EN AW 6060 T66**

2. MECHANICAL PROPERTIES	**EN 755-2**
YIELD / TENSILE STRENGTH	215 N/mm2 -60 N/ mm
ELONGATION A50	%6 (min.)
HARDNESS	70 HRB

3. DIMENSIONAL TOLERANCES	**EN 12020- 2**

4. THERMAL INSULATION BARS	**PA 66 GF 25**

5. SURFACE TREATMENTS	
5.1 ANODIC OXIDATION	**EN 17611 / QUALANOD**
ANODIC COATING THICKNESS	15-20 MICRON **EN ISO 2360**
5.2 POWDER COATING	**QUALICOAT-SEASIDE**
POWDER COATING THICKNESS	MIN 60 MICRON

6. GASKETS	EPDM / POLYPROPYLENE

Only gaskets designed and manufactured for this system and listed in this catalogue should be used during assembly and installation. Using other gaskets or brushes may cause functional or design problems.

7. ACCESSORIES

All accessories used for manufacturing, assembly, operation and installation have been developed for this system to ensure performance and correct functioning. Other accessories not listed in this catalogue may impair or compromise the safe operation of the components.

REFD77

THERMAL INSULATION VALUES (Uf)

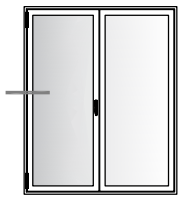

GLASS THICKNESSES: 24 / 28 / 32 / 36 / 50 mm

