ARCHITECTURAL CATALOGUE

Aluminium Windows, Doors and Facade Systems

RT50



RT50

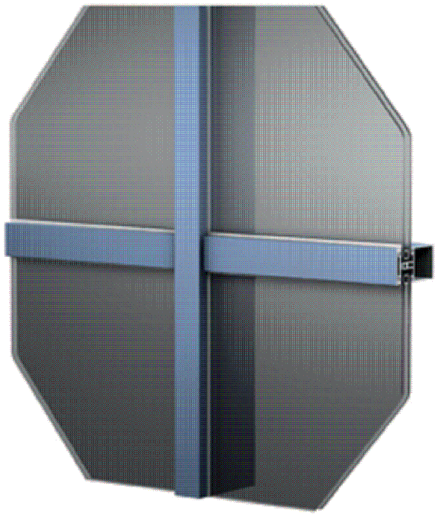

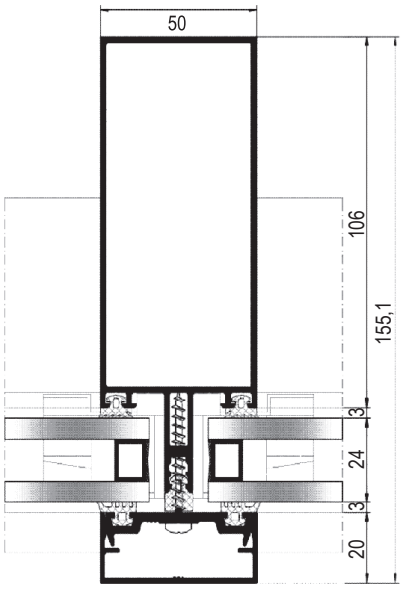

TECHNICAL PROPERTIES

FRAME / PROFILE WIDTH	50 mm
MULLION DEPTH	min. 30mm - max. 146mm
TRANSOM DEPTH	min. 30mm - max. 146mm
PROFILE WALL THICKNESS	1,5 / 1,8 mm
MAXIMUM GLASS THICKNESS	40mm
THERMAL INSULATION BAR	14,8mm

APPLICATION OPTIONS

CAPPED CURTAIN WALL	•
STRUCTURAL GLAZING	•
SEMI-CAPPED CURTAIN WALL	•
CONCEALED OUTWARD-OPENING SASH	•

PERFORMANCE VALUES
CAPPED CURTAIN WALL

AIR PERMEABILITY - EN 12152	**1** (150 Pa)	**2** (300 Pa)	**3** (450 Pa)	**4** (600 Pa)	
WATERTIGHTNESS - EN 12154	**R4** (150 Pa)	**R5** (300 Pa)	**R6** (450 Pa)	**R7** (600 Pa)	**RE...** (600+ Pa)
WIND-LOAD RESISTANCE - EN 13830	± **1200 Pa**				
ACOUSTIC INSULATION - EN ISO 717-1	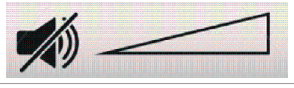	Rw (C ; Ctr) = 33,5(-1,6 ; 4,1) dB			
CAPPED SYSTEM Uf VALUE - EN 10077-2	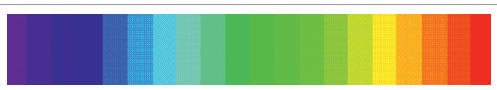	3,18 ~ 5,79 W/M²K			
STRUCTURAL GLAZING Uf VALUE - EN 10077-2		3,04 ~ 3,23 W/M²K			

THERMAL INSULATION VALUES (Uf)

CAPPED CURTAIN WALL

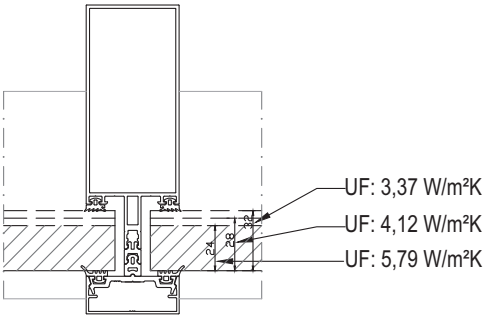

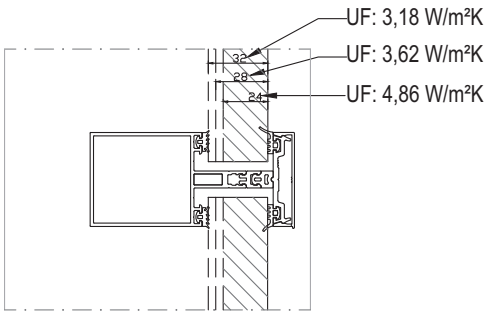

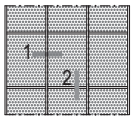

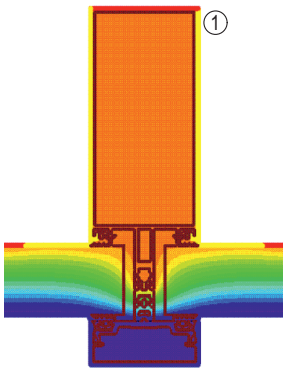

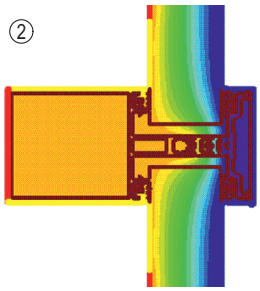

STRUCTURAL GLAZING

